Data Augmentation for Power Factor Correction Fault Classification : A GANs Approach

1st Yi-Hyeong Park
Electrical Engineering Dept.
Hanyang University
Seoul, Republic of Korea
robo20001117@hanyang.ac.kr

2nd Dong-In Lee
Electrical Engineering Dept.
Incheon National University
Incheon, Republic of Korea
apwn2955@inu.ac.kr

3rd Han-Shin Youn
Electrical Engineering Dept.
Incheon National University
Incheon, Republic of Korea
hsyoun@inu.ac.kr

4th Chang Mook Kang*
Electrical Engineering Dept.
Hanyang University
Seoul, Republic of Korea
kcm0728@hanyang.ac.kr

***Abstract*—The growing adoption of electric vehicles (EVs) has heightened the need for reliable and efficient On-Board Chargers (OBCs). Power Factor Correction (PFC) circuits within OBCs are critical for optimizing energy conversion and minimizing power losses. However, fault diagnosis in PFC circuits remains a challenge due to the difficulty of replicating real-world fault scenarios for data collection. This study addresses these challenges by employing Generative Adversarial Networks (GANs) to augment fault signal data. By generating diverse and realistic fault signals, this approach enhances the robustness of fault classification models. The proposed CRNNWGAN model, a fusion of C-RNN-GAN and WGAN-GP, effectively captures temporal dependencies and improves the accuracy of fault diagnosis. Experimental results demonstrate the superiority of the augmented dataset in classification tasks, providing a scalable solution for improving the reliability of EV charging systems.**

***Index Terms*—Electric Vehicle (EV), On-Board Charger (OBC), Power Factor Correction (PFC), Fault Diagnosis, Generative Adversarial Networks (GANs), CRNNWGAN, Data Augmentation, Machine Learning, Fault Classification.**

I. Introduction

The increase in Electric Vehicles (EVs) adoption highlights the need for complex On-board chargers (OBCs) diagnostic systems. These systems are crucial, not only for optimizing the operational efficiency of EVs but also for extending their lifespan. As OBCs grow in complexity, the capability to accurately classify various faults with faster speed becomes essential. This enhanced diagnostic precision is vital to mitigate risks ranging from minor malfunctions to major system failures that could lead to safety hazards.

OBCs fault classification faces significant challenges due to the diverse nature of faults, which can range from simple wiring issues to complete charger failures. Each fault type has a distinct impact on the vehicle's functionality, necessitating a classification system that can discern and categorize these faults accurately. Literature reveals that traditional methods struggle with this variability, often leading to suboptimal diagnostic performance [1].

About Table. I, Type 1 connectors, predominantly used in the USA and some parts of asia, feature a 5-pin design optimized for single-phase power, allowing the charging of one vehicle at a time. In contrast, Type 2 connectors are common across Europe and support up to three-phase power with a 7-pin design. This allows for higher currents, enabling faster charging rates and greater compatibility with various electric vehicles. Both types are designed with regional standards and vehicle compatibility in mind. Compared to slow chargers, fast chargers require a more complex circuit design to safely handle higher currents and voltages, necessitating various protective features and an efficient power management system.

TABLE I: Comparison of slow/fast charging

	Slow charging mode		**Fast charging mode**	
	Type 1 (single-stage)	**Type 2 (Three-stage)**	**DC combo (Type 1)**	**DC combo (Type 2)**
Connector	Single-phase AC	Three-phase AC	Type 1 with DC fast charging	Type 2 with DC fast charging
Country of usage	USA, S.KOREA, JAPAN	EU	USA, S.KOREA	EU
Charging Watt.	Max. 7.7kW	11kW ~43kW	50kW/100kW	

The continuing expansion of the EVs market intensifies the demand for reliable OBCs. With this, there is a critical need for diagnostics that can accurately identify and classify a broad spectrum of fault types. Advanced diagnostic systems can better adapt to and manage the complexities of modern OBCs, ensuring the safety and reliability of EVs on the road [2].

In an OBCs for electric and hybrid vehicles, PFC means Power Factor Correction [3]. This system is crucial as it minimizes power losses and inefficiencies during the conversion of AC to DC. By reducing the phase difference between the current and voltage from the power grid, PFC helps to ensure the efficient use of power. Within the OBCs, the PFC circuit plays a vital role in enhancing the charging efficiency and power quality of electric vehicles.

In PFC circuits, MOSFETs are integral as switching components that critically influence both the efficiency and operational integrity of the system. The failure of these MOSFETs, specifically through open or short faults, can lead to significant disruptions [4]. Regular monitoring and timely replacement of faulty MOSFETs are critical practices that help maintain system integrity and reliability, thus preventing operational failures and ensuring the safety of the electrical system.

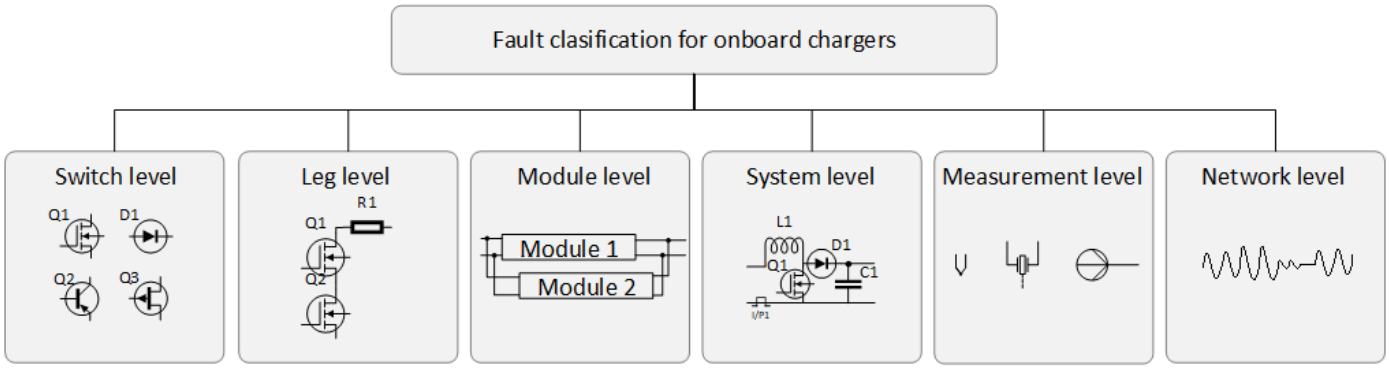

Fig. 1: Fault Classification for On-board Chargers [8]

Within an electric vehicle's OBCs, the PFC stage plays a critical role in power conversion efficiency and overall system stability. However, deliberately inducing faults in the PFC for data collection is highly impractical in real-world settings due to several concerns, including safety concerns or financial costs.

In this paper, we focus on categorizing sensor signals according to specific fault conditions and augmenting any insufficient or underrepresented real-world data using Generative Adversarial Networks (GANs) method. By generating multiple augmented signals—even within the same time interval T—the study aims to increase both the volume and variety of fault signal data, thus overcoming limitations posed by limited real-world data collection. Ultimately, this approach is expected to enhance the accuracy and robustness of fault prediction and diagnosis models, enabling them to better handle a wide range of fault conditions and operational variations that are otherwise difficult to capture in practice.

II. Review of existing methodologies

The battery fault diagnosis is similar to OBCs fault detection. In the field of battery fault diagnosis, predictive methodologies have shown considerable promise in enhancing the reliability of battery systems in electric vehicles. One notable study in [5], presents a robust diagnostic framework that incorporates machine learning algorithms to monitor and predict the health deterioration of EVs batteries. Their method combines regression analysis with decision tree algorithms, offering a sophisticated model that preemptively identifies potential battery failures. This predictive capability is critical in extending battery life and ensuring vehicle safety, demonstrating the effectiveness of integrating advanced computational techniques in battery diagnostics.

Similar to these challenges, the integration of advanced technologies such as machine learning and GANs has been transformative. Particularly, GANs have proven effective in simulating diverse fault scenarios, thus enhancing the robustness of fault classification models. This technology facilitates the creation of extensive, varied datasets, significantly improving the training and accuracy of diagnostic models [6]. These methods exemplify how data augmentation can artificially expand a dataset with new, synthesized variations, thereby providing a more comprehensive training environment. This enhances the model's ability to generalize from training to real-world application, crucial for tasks like human activity recognition where the variability in how activities are performed can be quite high. But this method not considered computational efficiency, we can't guarantee that it will work in the best time.

Among the various fault classification frameworks for Power Electronic Converters (PECs) and OBCs presented in Fig. 1, this paper specifically focuses on the switch-level approach [8]. The diagram specifically illustrates common origins of such faults, providing a valuable reference for identifying and analyzing potential failure modes within switch components, such as MOSFETs. This detailed classification supports our decision to concentrate on switch-level faults, which commonly manifest as open or short circuits in power semiconductors. A fault diagnosis framework presented in [9]–[11] elaborates on how minimizing the time to classify faults after detection correlates with improved reliability and safety of automotive systems. This research underscores the importance of quick fault resolution in maintaining continuous system functionality and safety.

In our previous research [12], we emphasized the significance of the "signal after fault" duration in the fault classification process of OBCs. It became evident that shorter durations in this phase are crucial for enhancing the efficiency of diagnostic procedures. This insight is crucial as it directly impacts the speed and accuracy with which faults can be addressed, ultimately influencing system reliability and safety. However, in real industrial environments including OBCs in PFC at EVs, recreating various fault conditions can be both costly and time-consuming, making it difficult to collect sufficient fault data. During our previous research, we particularly experienced a shortage of fault data. To address this challenge, we employed GANs for data augmentation. By artificially generating fault signals under diverse conditions, we were able to secure data that would otherwise be challenging to obtain through physical experiments, ultimately providing a more robust dataset for training and validating our fault classification models.

In our experimental work on the PFC unit of an

OBCs, We aim to induce and classify faults at the switch level—specifically targeting MOSFETs devices. This approach is chosen because MOSFETs are critical to the efficiency and reliability of PFC operations and are susceptible to frequent failures that can significantly impact the overall system performance. By augmenting these faults, we can better understand their impact and develop more robust fault detection and mitigation strategies. This research not only contributes to enhancing the reliability of electric vehicle chargers but also aids in advancing the fault diagnostic capabilities of modern automotive power systems.

Fault type	Impact on circuit	Typical consequences
Open Fault	Prevents the circuit from operating efficiently, reducing the system's overall energy efficiency and undermining its ability to manage power and voltage regulation.	Reduction in energy efficiency, interruption of system operation, potential for increased operational costs due to inefficiency.
Short Fault	Can lead to circuit damage from excessive heat and poses a significant risk of fire hazards. Also threatens the reliability and safety of the entire electrical system.	Risk of damage to the MOSFET and other circuit components, increased maintenance costs, safety risks including potential fire.

TABLE II: Impact of different fault types on circuits and their typical consequences

The description in table. II to specifically experiment with open and short faults in MOSFETs within PFC circuits is driven by the significant impact these faults have on the overall functionality and safety of electrical systems. Open and short faults represent the most common and critical failures in semiconductor devices, and understanding their effects is crucial for enhancing circuit reliability and efficiency. Open Faults cause interruptions in circuit operation, leading to inefficiencies in energy usage and potential disruptions in power supply, which can affect a wide range of downstream electronic systems. Short Faults, on the other hand, can result in overheating and potentially catastrophic failures, including fire hazards, which pose significant risks to both property and life.

III. Background

A. GANs (Generative Adversarial Networks) [13]

- **Concept:** Proposed by Ian Goodfellow et al. in 2014, GANs consist of two networks: a *generator* that creates fake data from random noise and a *discriminator* that distinguishes real data from the generated ones. Especially GANs used in image augmentation [14], [15].
- **Training Process:**
  - The generator learns to produce outputs indistinguishable from real data.
  - The discriminator tries to correctly classify real versus fake samples.
  - Both networks are trained in an adversarial manner until the generator produces high-quality fake samples.
- **Key Feature:** Can generate realistic data in various domains (images, text, audio, etc.).

B. C-RNN-GAN (Continuous Recurrent Neural Network GAN) [16]

- **Concept:** Introduced by Anders E. Mogren in 2016, it integrates *Recurrent Neural Networks (RNNs)* into the GAN framework to handle sequence data.
- **Structure:**
  - The generator uses an RNN (e.g., LSTM/GRU) to generate continuous-valued sequences.
  - The discriminator also utilizes an RNN to determine whether an input sequence is real or generated.
- **Purpose:** Designed to generate time-series data such as music (MIDI sequences), text, or any sequential data requiring continuity.
- **Key Feature:** Effectively models the temporal dependencies of sequential data, making it well-suited for music and other time-based signals.

C. WGAN-GP (Wasserstein GAN with Gradient Penalty) [17]

- **Concept:** An improvement over the original *Wasserstein GAN (WGAN)* introduced by Martin Arjovsky, Soumith Chintala, and Léon Bottou in 2017.
- **WGAN:**
  - Uses the Earth Mover's (Wasserstein) distance as a metric to measure the difference between real and generated distributions.
  - Mitigates problems such as mode collapse and gradient vanishing often observed in traditional GANs.
- **WGAN-GP:**
  - Proposed by Ishaan Gulrajani et al. in 2017.
  - Replaces weight clipping with a *gradient penalty* to enforce the Lipschitz constraint more robustly.
  - Improves training stability and quality of generated samples.
- **Key Feature:** Provides a more stable and efficient training framework than standard GANs, improving both convergence and diversity in generated outputs.

IV. CRNNWGAN for Fault Classification

CRNNWGAN is a novel fusion of the C-RNN-GAN and WGAN-GP frameworks, we designed to enhance the stability and quality of generative performance. We integrated the RNN-based generator architecture, inspired by C-RNN-GAN, with the gradient penalty technique of WGAN-GP. This combined approach not only capitalizes on the strengths of recurrent neural networks for sequential data but also leverages WGAN-GP's robust training method to mitigate issues such as mode collapse and unstable gradient updates. By uniting these two methodologies, we sought to create a more reliable and efficient model for generating complex time-series or sequential outputs, hence naming our GAN model "CRNNWGAN".

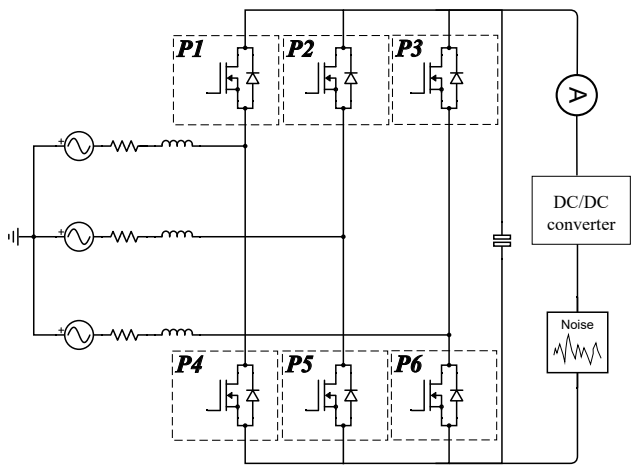

Fig. 2: Power Factor Correction Topology and PSIM schemetic

Fault Type	Description
Normal	A normal signal, without any fault
Pn_open_fault	A open fault has occurred in the ***n****th n-ch mosfet*
Pn_short_fault	A short fault has occurred in the ***n****th n-ch mosfet*

TABLE III: Description of fault types

A. Data Collection

In PSIM schematic condition at Fig. 2, We tested six MOSFETs fault scenario (each MOSFETs faults contains ***open/short fault***, so in our test n means ***n***(=1∼6). And n means fault point (***Pn***, ***P1*** to ***P6*** in Fig. 2) in MOSFETs in PFC module.

Table. III is descripting about raw current data before any signal pre-processing. And Fig. 3 illustrates the three-phase current signal data observed in a system with an ***normal*** and ***P1_fault*** operation. This figure illustrates the impact of normal operation, open fault, and short fault conditions on the phase variations in a three-phase electrical system, each displaying the current changes over time. PowerSim(PSIM) used in this study for simulating ***normal/open/short*** fault situation and data collected with PSIM.

Fig. 3 illustrates current sensor measurements for three conditions (Normal, P1_open, and P1_short) in the time range from 0 s to 0.03125 s in Ampere sensor at Fig. 2. Although the measurement interval remains consistent across all three plots, different sampling rates and data quantities were used to reflect realistic constraints in acquiring fault data:

1) ***Normal*** *(red):* A 32 kHz sampling rate is assumed, corresponding to a time step of 0.00003125 s. We extracted the first 1,000 samples, covering approximately 0 to 0.03125 s. The observed current sensor values are on the order of -8.6×10^{-9} A, showing a relatively small amplitude and a wider scatter compared to the fault conditions.

2) ***P1_open*** *(green):* To model the practical difficulty of obtaining sufficient data for an open-circuit fault, we used a lower sampling frequency (about one-tenth of the normal case), i.e. 0.0003125 s per sample. Only 100 data points were collected (still spanning 0 to 0.03125 s). The peak current sensor value reaches approximately 6.64×10^{-8} A, exceeding that of the Normal condition.

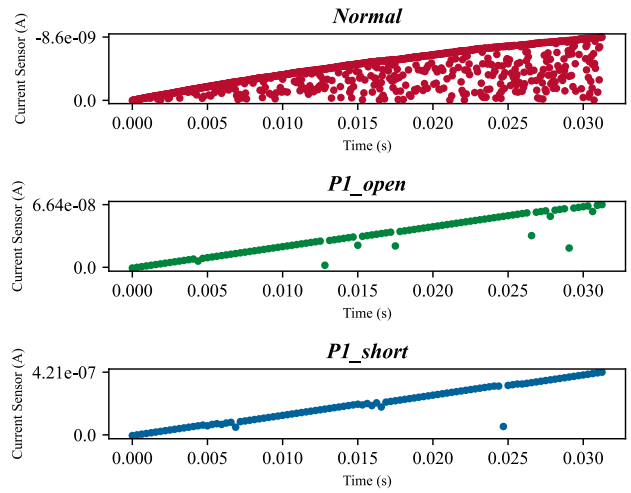

Fig. 3: Compare of ***Normal*** / ***P1_open_fault*** / ***P1_short_fault***

3) ***P1_short*** *(blue):* Similarly, for the short-circuit fault, we employed the same lower sampling rate of 0.0003125 s and also collected just 100 samples. Over the same 0 to 0.03125 s range, the current sensor readings can climb to about 4.21×10^{-7} A, which is the highest among the three conditions.

This setup reflects a realistic scenario where fault data P1_open, P1_short are much harder to obtain in large quantities due to practical limitations (cost, safety, etc.), whereas normal operation data can often be sampled at higher frequencies for extended periods. The resultant plots show clear differences in sensor values under each condition, providing a comparative basis for subsequent analysis of fault characteristics.

B. Method for Augmentation with GANs

The pseudo code (**Algorithm 1**) above outlines the high-level training procedure for our CRNNWGAN. The generator $G(\theta_G)$ uses LSTM layers to capture temporal dependencies in the generated data, mirroring the recurrent approach of C-RNN-GAN. By concatenating previous and next points and injecting noise, it produces intermediate (or 'middle') points in a sequence, reflecting the sequence modeling paradigm found in recurrent GAN frameworks. The TRAIN-CRNNWGAN function in **Algorithm 1** adopts a critic $C(\theta_C)$ (instead of a traditional discriminator) to measure the Wasserstein distance between real and generated distributions. It applies the gradient penalty term, following the WGAN-GP approach, to enforce Lipschitz continuity and stabilize training. A separate critic_iter loop updates the critic multiple times per single generator update, which is a hallmark of WGAN-based training procedures.

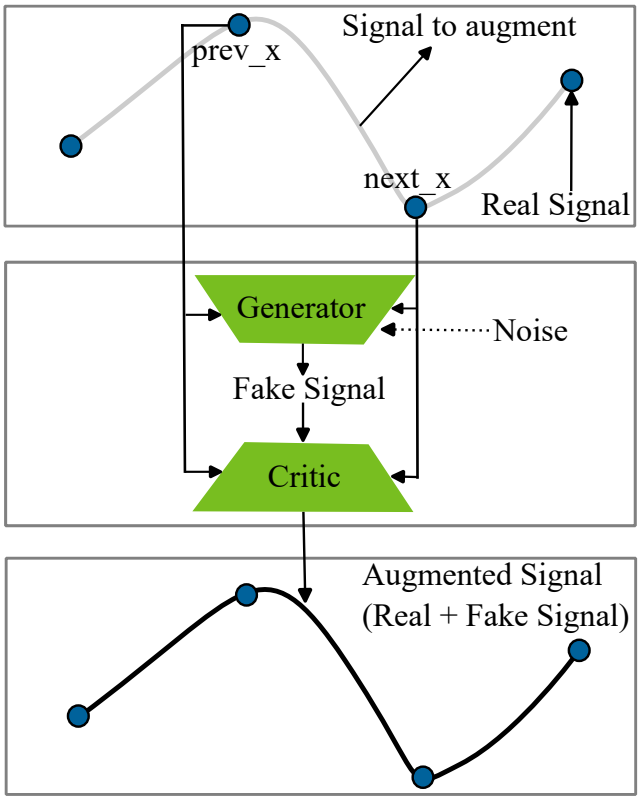

Fig. 4: Concept of CRNNWGAN (augmented signal using GANs)

And we explain CRNNWGAN procedure with Fig. 4. First, the generator $G(\theta_G)$ and the critic $C(\theta_C)$ are initialized with the specified hyperparameters (e.g., number of epochs, batch size). Then, the algorithm iterates over the dataset $\mathcal{D}$ in mini-batches. For each mini-batch, the sequence data $\mathbf{x}$ is divided into a previous segment $(\mathbf{x}_{\text{prev}})$, a middle segment $(\mathbf{x}_{\text{mid}})$, and a next segment $(\mathbf{x}_{\text{next}})$. A noise vector $\mathbf{z}$ sampled from a Gaussian distribution is passed to the generator G to produce a synthetic middle point $\mathbf{x}_{\text{fake}}$. Subsequently, the critic C is updated by computing losses on both the real sample $(\mathbf{x}_{\text{mid}})$ and the fake sample $(\mathbf{x}_{\text{fake}})$. After the critic update, the generator is optimized based on its own loss, driving $\mathbf{x}_{\text{fake}}$ to become more realistic (i.e., fool the critic). Upon completion of all epochs, the algorithm returns the trained parameters of both G and C. And based on the premise that normal-class data can be collected in real-world scenarios through various methods, including PSIM, we chose not to augment the normal-class data and instead obtained it directly from PSIM.

Algorithm 1 CRNNWGAN Training Procedure

procedure TRAIN-CRNNWGAN($\mathcal{D}, \theta_G, \theta_C$)
  Initialize generator $G(\theta_G)$, critic $C(\theta_C)$
  (numEpochs, batchSize, ...)
  for epoch = 1 to numEpochs **do**
    for each mini-batch $\mathbf{x} \in \mathcal{D}$ **do**
      Split $\mathbf{x}$ into $(\mathbf{x}_{\text{prev}}, \mathbf{x}_{\text{mid}}, \mathbf{x}_{\text{next}})$
      Sample noise $\mathbf{z} \sim \mathcal{N}(0, I)$
      $\mathbf{x}_{\text{fake}} \leftarrow G(\mathbf{x}_{\text{prev}}, \mathbf{x}_{\text{next}}, \mathbf{z})$
      Compute critic loss via $C(\mathbf{x}_{\text{prev}}, \mathbf{x}_{\text{mid}}, \mathbf{x}_{\text{next}})$
      Compute critic loss via $C(\mathbf{x}_{\text{prev}}, \mathbf{x}_{\text{fake}}, \mathbf{x}_{\text{next}})$
      Update θ_C by minimizing critic loss
      if critic_update_done **then**
        Compute generator loss using $C(\mathbf{x}_{\text{fake}})$
        Update θ_G by minimizing generator loss
      end if
    end for
  end for
  return $(G(\theta_G), C(\theta_C))$
end procedure

C. Environment setup

	Specification	Details
CPU	Ryzen 5600G	6 Cores, 12 threads, 3.9 GHz
RAM	64GB(16*4)	DDR4, 2400 MHz
OS	Windows 10	64-bit
Software	Python	Version 3.8

TABLE IV: Experimental Setup for Computer Environment

To ensure the reproducibility of our deep learning experiments, it is crucial to provide detailed specifications of the computational environment used. The Table. IV outlines the exact hardware and software configurations, including the CPU, RAM, and versions of Python. This level of detail allows other researchers to replicate our experimental setup precisely, minimizing variations that could lead to different results.

V. Simulation Results

A. Result of MMD

The Fig. 5 above presents bar charts of the MMD (Maximum Mean Discrepancy) values for datasets generated by different GAN (Generative Adversarial Network) models. MMD is a statistical metric used to measure the distance between two probability distributions, commonly employed to evaluate how closely the distribution of generated data matches the real data. To obtain these values, we use an RBF (Radial Basis Function) kernel to measure the distance between original data points and the synthetic samples generated by each GAN. The MMD is derived from the kernel values using the following in Eq. (1):

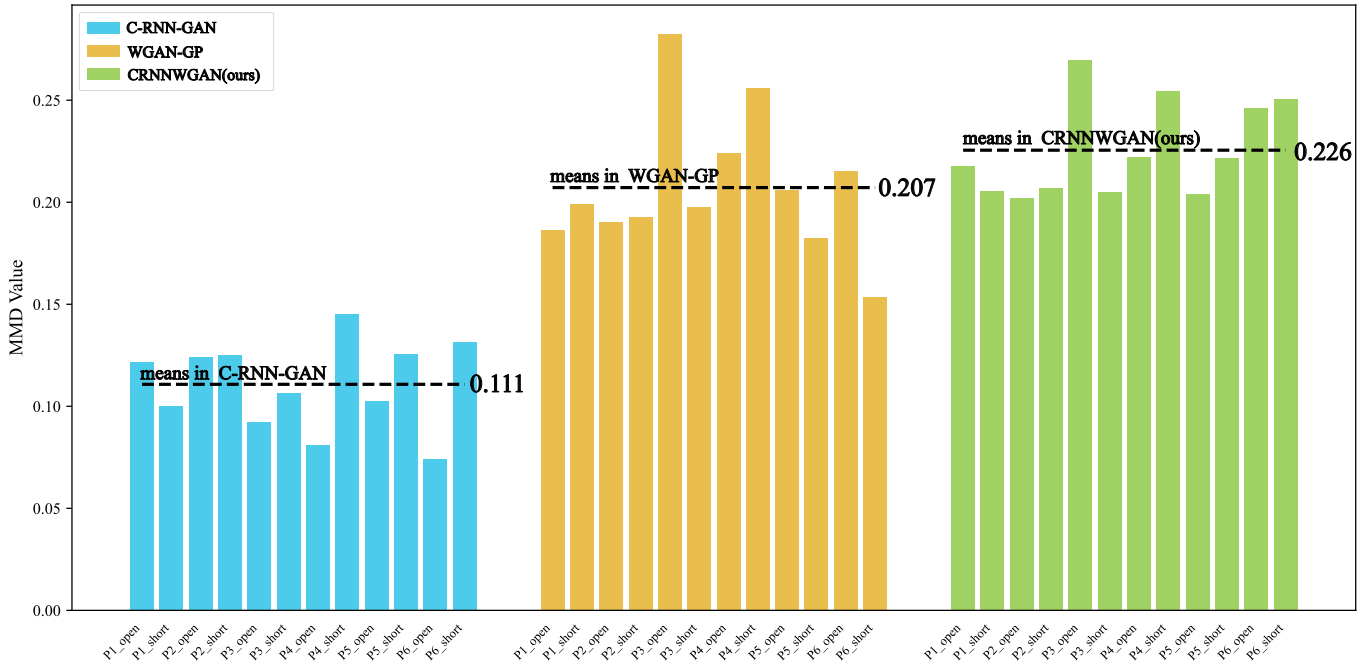

Fig. 5: MMD(Maximum Mean Discrepancy)

$$\mathrm{MMD}^2(X,Y) = \frac{1}{m^2}\sum_{i=1}^{m}\sum_{j=1}^{m} k(x_i, x_j) + \frac{1}{n^2}\sum_{i=1}^{n}\sum_{j=1}^{n} k(y_i, y_j) - \frac{2}{mn}\sum_{i=1}^{m}\sum_{j=1}^{n} k(x_i, y_j). \tag{1}$$

$$k(x,y) = \exp\left(-\gamma \left\|x-y\right\|^2\right), \gamma = 1/dim \tag{2}$$

where m and n denote the numbers of original and generated samples, respectively, and $k(\cdot,\cdot)$ is the RBF kernel. The code then takes the square root of $\mathrm{MMD}^2(X,Y)$ to report the final MMD value. Specifically, the code calculates MMD by first embedding the original and augmented samples into a 2D space via t-SNE (n_components=2), and then computing the RBF kernel matrix K in Eq.(2) for these two dimmension coordinates. Each bar in the figure corresponds to the MMD for a specific class, illustrating how closely the GAN's synthetic data matches the original data distribution for that class. Lower MMD values indicate a closer match between the two distributions, whereas higher values imply greater divergence. By examining these bar charts, one can visually compare how effectively each GAN model learns and reproduces the underlying data distribution across various classes. A smaller MMD indicates a closer match to the real data distribution. In this graph, three models—C-RNN-GAN (blue bars), WGAN-GP (yellow bars), and CRNNWGAN(green bars, ours) —are compared across various fault conditions (e.g., P1, P2, ..., P6 with "open" or "short" states). Each bar shows the MMD value for a specific fault type, and the dashed horizontal line indicates the average MMD for each model. The results show that the average MMD values are 0.111 for C-RNN-GAN, 0.207 for WGAN-GP, and 0.226 for CRNNWGAN(ours). From an MMD standpoint, C-RNN-GAN exhibits a relatively lower value, implying that it generates data distributions closer to the real data. But in our experiment, we assume a process where 100 original signal samples are expanded to 1,000. Since it is augmented by a factor of 10, it is interpreted that an increase in the MMD value may be inevitable. Consequently, the CRNNWGAN model tends to yield higher MMD values. However, based on the classification results using LazyPredict, we observed that higher MMD values can actually lead to better classification performance.

B. Result of predict using lazypredict

Fig. 6 presents the average accuracies of various datasets in LazyPredict, measured across the top 5 (left) and top 10 (right) classifiers. Four data settings are compared: Original, CRNNGAN, WGAN-GP, and CRNNWGAN. For the top 5 classifiers, both WGAN-GP and CRNNWGAN achieve an average accuracy of 1.000, surpassing the values of Original (0.630) and CRNNGAN (0.630). In the top 10 classifier scenario, WGAN-GP records 0.960 while CRNNWGAN obtains 0.980, again outperforming Original (0.617) and CRNNGAN (0.610). These results indicate that augmenting data with advanced GAN models such as WGAN-GP or CRNNWGAN can significantly enhance classification performance, particularly in cases where the original dataset may be insufficient to train robust fault classification models. The results indicate

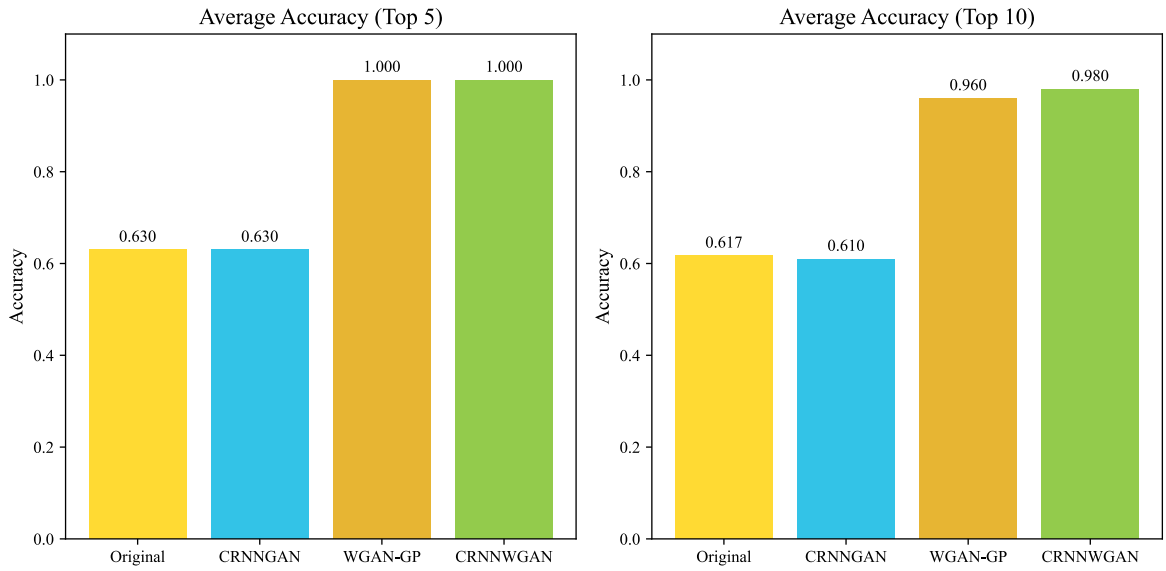

Fig. 6: Average Accuracy in lazypredict

that methods incorporating generative models (WGAN-GP and CRNNWGAN) significantly outperform both the original dataset and the basic CRNNGAN approach. One key reason is that WGAN-GP more effectively stabilizes the training of the generator, leading to higher-quality synthetic data that closely resemble the true data distribution. This improved synthetic data augments the training set in a way that reduces overfitting and enhances the model's ability to generalize. Furthermore, the CRNNWGAN approach benefits from the CRNN architecture's capacity for feature extraction, combined with WGAN's robust generation, yielding synergistic gains in accuracy. In contrast, the CRNNGAN model may not consistently generate high-fidelity data, which can limit its overall impact on classification accuracy. When comparing the top 5 and top 10 accuracies, it becomes clear that the sophisticated generative models maintain their advantage, indicating consistency across multiple classification algorithms used by lazypredict. This consistent performance across diverse classifiers demonstrates the versatility and robustness of the generated datasets from WGAN-GP and CRNNWGAN. The original dataset, while still strong, lacks the enriched variation provided by generative augmentation, which is why its performance trails behind the more advanced models. Ultimately, these findings highlight the importance of high-quality data augmentation, as it not only expands the dataset but also improves the model's feature learning capacity. By refining how synthetic data is produced—especially through WGAN-GP and its variants—the classification accuracy can be substantially boosted in various machine learning pipelines.

VI. Conclusion

We proposed the CRNNWGAN, a GAN-based data augmentation method to enhance fault classification in PFC circuits. Given the challenges associated with replicating real-world fault scenarios, our approach effectively generated synthetic fault data, improving model robustness and classification accuracy. The experimental results demonstrated that the inclusion of augmented data significantly enhanced the performance of our classifier compared to training with real-world data alone. By leveraging CRNNWGAN, we successfully synthesized realistic fault signals while preserving key characteristics essential for accurate diagnosis. The proposed method provides a promising solution for addressing data scarcity in power electronics fault classification, offering practical benefits for the development of more OBCs. Future work will focus on further optimizing the generative model to improve the diversity and fidelity of the synthesized signals. Additionally, we plan to explore real-time implementation and evaluate the method's performance under various operating conditions to ensure its applicability in real-world scenarios.

Acknowledgment

This work was supported by the Korea Evaluation Institute of Industrial Technology (KEIT) grant funded by the Korea government (MOTIE) under Grant No. RS-2024-00443216, titled "Development and PoC of On-Device AI Computing-based AI Fusion Mobility Device."

References

[1] A.R. Dar, A. Haque, M.A. Khan, V.S.B. Kurukuru and S. Mehfuz, "On-board chargers for electric vehicles: A comprehensive performance and efficiency review," Energies, 17 (2024), p. 4534, doi: 10.3390/en17184534.

[2] R. Machlev, "Ev battery fault diagnostics and prognostics using deep learning: Review challenges & opportunities," Journal of Energy Storage, (2024), vol. 83, pp. 110614, doi.org/10.1016/j.est.2024.110614

[3] Zhou. N, Wang. K, Shi. X and Chen. Z, "Detection and Analysis of Abnormal High-Current Discharge of Cylindrical Lithium-Ion Battery Based on Acoustic Characteristics Research," World Electric Vehicle Journal, 2024, 15(6):229, doi: 10.3390/wevj15060229.

[4] M. J. Scott, Fu. L, Zhang. X, Li. J, Yao. C, Sievers. M, and Wang. J, "Merits of gallium nitride based power conversion," Semicond. Sci. Technol, vol. 28, Jul. 2013, Art. no. 074013.

[5] V. S. Naresh, G. V. N. S. R. Ratnakara Rao and D. V. N. Prabhakar, "Predictive machine learning in optimizing the performance of electric vehicle batteries: Techniques, challenges, and solutions," WIREs Data Min. Knowl. Discov., Apr. 2024, doi: 10.1002/widm.1539.

[6] MONDAL. S and GOSWAMI. S. S, "Machine Learning Applications in Automotive Engineering: Enhancing Vehicle Safety And Performance," 2024, Journal of process management and new technologies, 12(1-2), 61-71.

[7] C. -T. Lin, S. -W. Huang, Y. -Y. Wu and S. -H. Lai, "GAN-Based Day-to-Night Image Style Transfer for Nighttime Vehicle Detection," in IEEE Transactions on Intelligent Transportation Systems, vol. 22, no. 2, pp. 951-963, Feb. 2021, doi: 10.1109/TITS.2019.2961679.

[8] Gaona-Cárdenas. L.-F, Vázquez-Nava. N, Ruíz-Martínez. O.-F, Espinosa-Calderón. A, Barranco-Gutiérrez. A.-I and Rodríguez-Licea. M.-A, "An Overview on Fault Management for Electric Vehicle Onboard Chargers," Electronics 2022. 11. 1107, doi: 10.3390/electronics11071107

[9] W. G. Fenton, T. M. McGinnity and L. P. Maguire, "Fault diagnosis of electronic systems using intelligent techniques: a review," in IEEE Transactions on Systems, Man, and Cybernetics, Part C (Applications and Reviews), vol. 31, no. 3, pp. 269-281, Aug. 2001, doi: 10.1109/5326.971655.

[10] H. Min, Y. Fang, X. Wu, X. Lei, S. Chen, R. Teixeira, B. Zhu, X. Zhao, and Z. Xu, "A fault diagnosis framework for autonomous vehicles with sensor self-diagnosis," Expert Syst. Appl., vol. 224, Aug. 2023, Art. no. 120002.

[11] Lee. B, Kim. Y, Lee. H and Kang. C, "Bidirectional Gated Recurrent Unit Neural Network for Fault Diagnosis and Rapid Maintenance in Medium-Voltage Direct Current Systems," Sensors 2025, 25, 693, doi: doi.org/10.3390/s25030693.

[12] Y. H. Park, D. I. Lee, H. S. Youn and C. M. Kang (2024). "Development OBC Fault Diagnosis Based on Boosting Algorithm and Exponential Moving Average," The Korean Society of Automotive Engineers, Spring Conference.

[13] Goodfellow. I, Pouget-Abadie. J, Mirza. M, Xu. B, Warde-Farley. D, Ozair. S, Aaron. C and Bengio, Y, 2014, "Generative adversarial nets," Advances in neural information processing systems, 27.

[14] C. -T. Lin, S. -W. Huang, Y. -Y. Wu and S. -H. Lai, "GAN-Based Day-to-Night Image Style Transfer for Nighttime Vehicle Detection," in IEEE Transactions on Intelligent Transportation Systems, vol. 22, no. 2, pp. 951-963, Feb. 2021, doi: 10.1109/TITS.2019.2961679.

[15] L. Yang, H. Yang, B. -B. Hu, Y. Wang and C. Lv, "A Robust Driver Emotion Recognition Method Based on High-Purity Feature Separation," in IEEE Transactions on Intelligent Transportation Systems, vol. 24, no. 12, pp. 15092-15104, Dec. 2023, doi: 10.1109/TITS.2023.3304128.

[16] Mogren, O. (2016), "C-RNN-GAN: Continuous recurrent neural networks with adversarial training," 2016, *arXiv preprint arXiv:1611.09904*. [Online]. Available: https://arxiv.org/abs/1611.09904

[17] I. Gulrajani, F. Ahmed, M. Arjovsky, V. Dumoulin, and A. C. Courville, "Improved training of Wasserstein GANs," in Proc. NIPS, 2017, pp. 5767–5777.